NOTE: CONTRACTOR IS REQUIRED TO PROVIDE 4 - 22 1/2⁰, 45⁰, OR 90⁰ VERTICAL BENDS AT EACH NORMAL OR SPECIAL CREEK CROSSING. CONTRACTOR AT HIS OPTION MAY EXTRA APPROACH TRENCH DEPTH TO AVOID USE OF BENDS. ALLOWABLE DEFLECTION OF PIPE MAY NOT BE EXCEED UNDER ANY SITUATION.

NOTE: BACKFILL 12" ABOVE PIPE W/COMPACTED EARTH & THEN FILL TRENCH W/EXCAVATED ROCK.

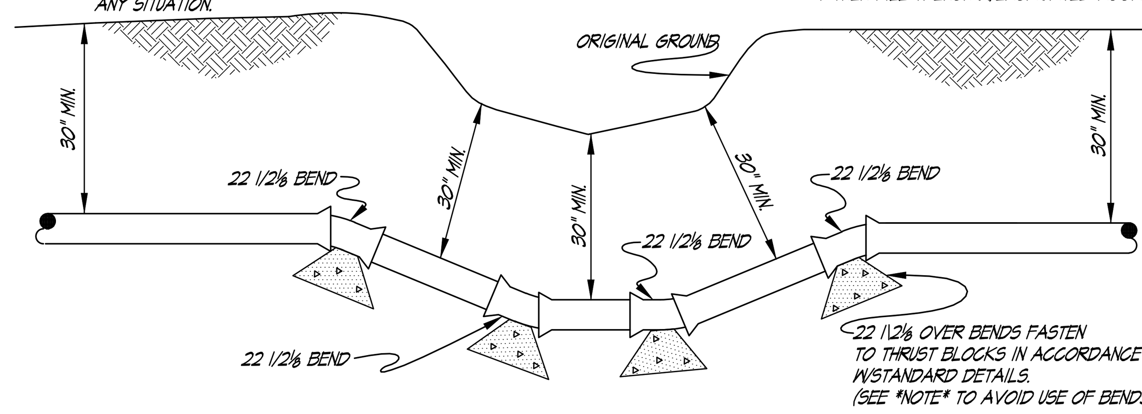

DETAIL OF NORMAL DITCH OR STABLE BED CREEK CROSSING WITHOUT ENCASEMENT

N.T.S. (NO EXTRA PAYMENT) (MD3-05)

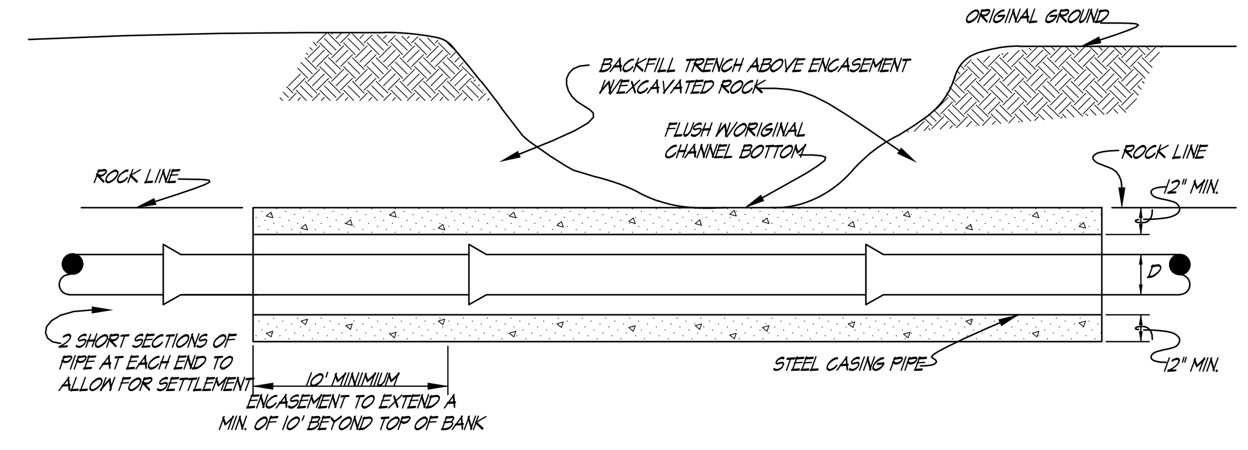

PAY LENGTH FOR SPECIAL CROSSING "B" = ENCASEMENT LENGHT. BID ITEM DOES NOT INCLUDE THE COST OF CARRIER PIPE WHICH IS PAYED UNDER THE BID PRICE FOR LINE INSTALLED.

CONCRETE ENCASEMENT TO BE CLASS "E" CONCRETE AND A MINIMIUM OF 24" WIDE OR (D + 12") AND (12" + 6" + D) HIGH.

SPECIAL CREEK CROSSING TYPE "B" IN SOLID ROCK

N.T.S. (MD3-03)

NOTE: TYPE "A" CREEK CROSSING TO BE FIELD CHECKED BY ENGINEER. PAYMENT FOR CROSSING IS BASED ON PRICE PER BAG REQUIRED AS STATED IN BID PROPOSAL. PRICE SHALL BE INCLUDE ALL RELATED WORK TO INSTALLING THE ANCHORS & LINE. DOES NOT INCLUDE COST OF CARRIER PIPE WHICH IS PAID UNDER THE BID PRICE FOR LINE INSTALLED "OPEN-CUT".

NOTE: FOR TYPE "A" CREEK CROSSING THE TRENCH SHALL BE LAID ON SUCH A GRADE THAT THE PIPE WILL LAY ON THE BOTTOM OF THE TRENCH BY ITS OWN WEIGHT. THE PIPE SHALL BE FURTHER PROTECTED BY PLACING A BAG OF SAKRETE, IN THE BAG & UNOPENED, ON 4 Ft. CENTERS ALONG THE PIPE FOR A MINIMUM DISTANCE OF 10 Ft. BEYOND THE TOP OF THE CREEK BANK OR AS DIRECTED BY THE ENGINEER.

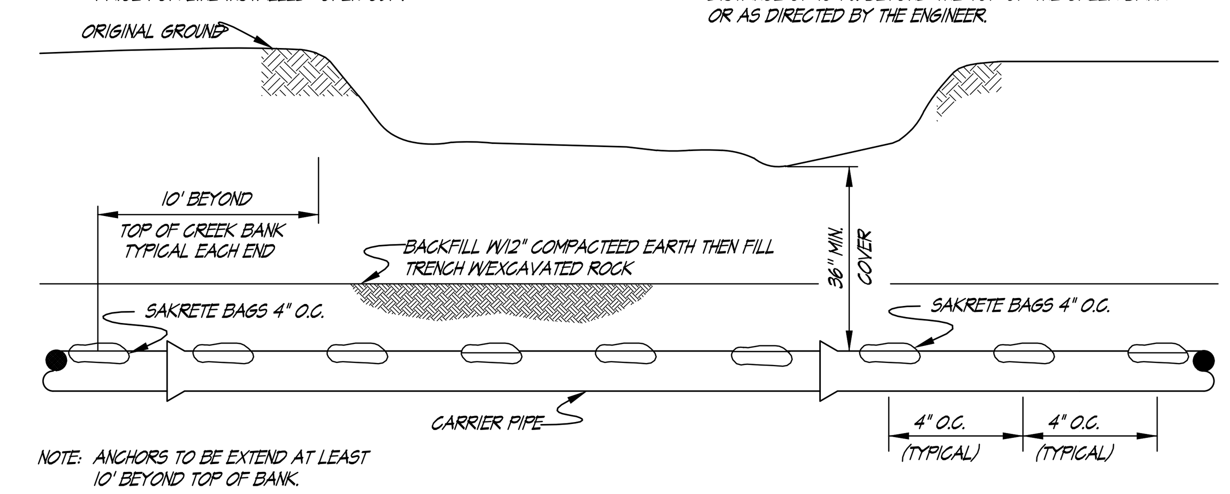

NOTE: ANCHORS TO BE EXTEND AT LEAST 10' BEYOND TOP OF BANK.

TYPICAL INSTALLATION OF LINE ANCHORS FOR SPECIAL CREEK CROSSING TYPE "A" IN LOOSE ROCK OR UNSTABLE MATERIAL

N.T.S. (MD3-04)

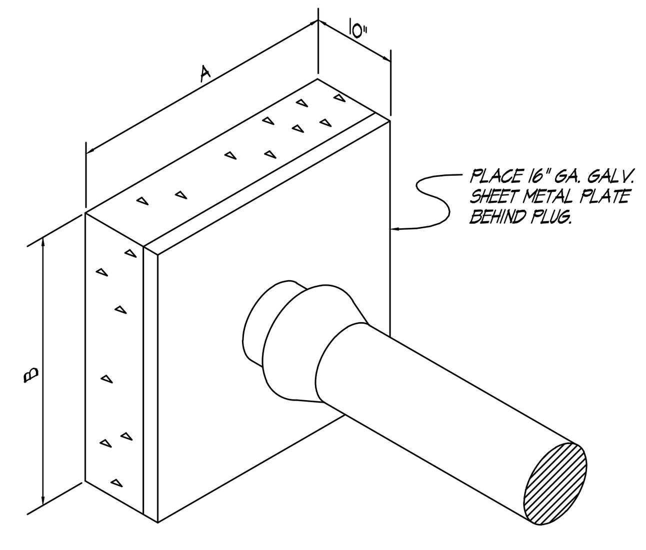

THRUST BLOCK FOR PLUGGED DEADEND LINE

N.T.S. (MD2-01)

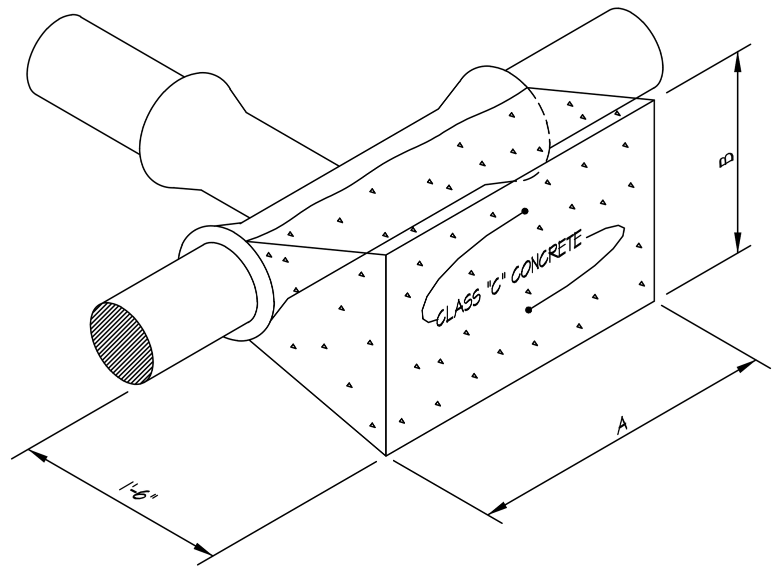

NOTE: ALL THRUST BLOCKS SHALL BE CONSTRUCTED OF CLASS "C" CONCRETE. NO EXTRA PAYMENT FOR THRUST BLOCKS. ALL COST TO BE INCLUDED IN UNIT PRICE BID FOR INSTALLING PIPE.

THRUST BLOCK FOR TEE

N.T.S. (MD2-02)

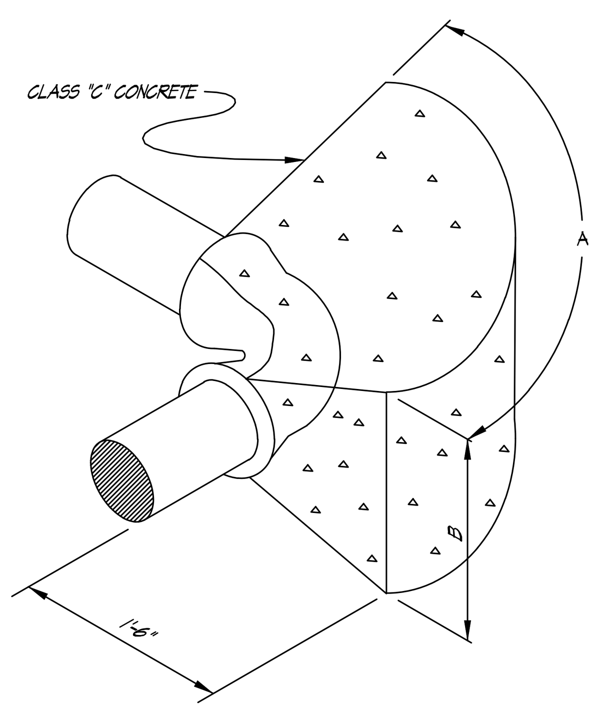

NOTE: 1"x4" STEEL STRAP ANCHORED WITH 1/2" ROD, ALL COATED W/ BITUMASTIC SHALL BE CONSIDER EQUAL TO A PAIR OF #4 BARS FOR USE W/ THRUST BLOCKS.

THRUST BLOCK FOR HORIZONTAL 90⁰ BEND

N.T.S. (MD2-03)

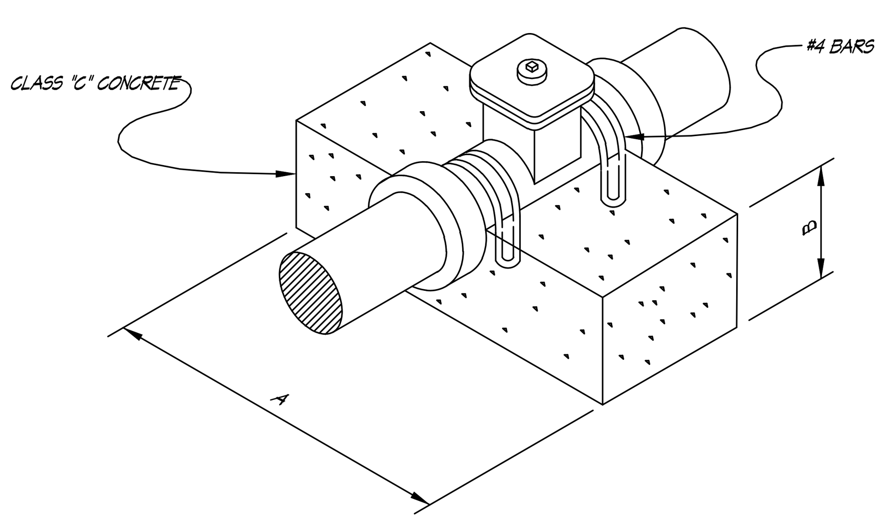

NOTE: APPLY KOPPERS BITUMASTIC #50 TO ALL BARS OR STRAPS USED W/ THRUST BLOCKS

THRUST BLOCK FOR GATE VALVE

N.T.S. (MD2-04)

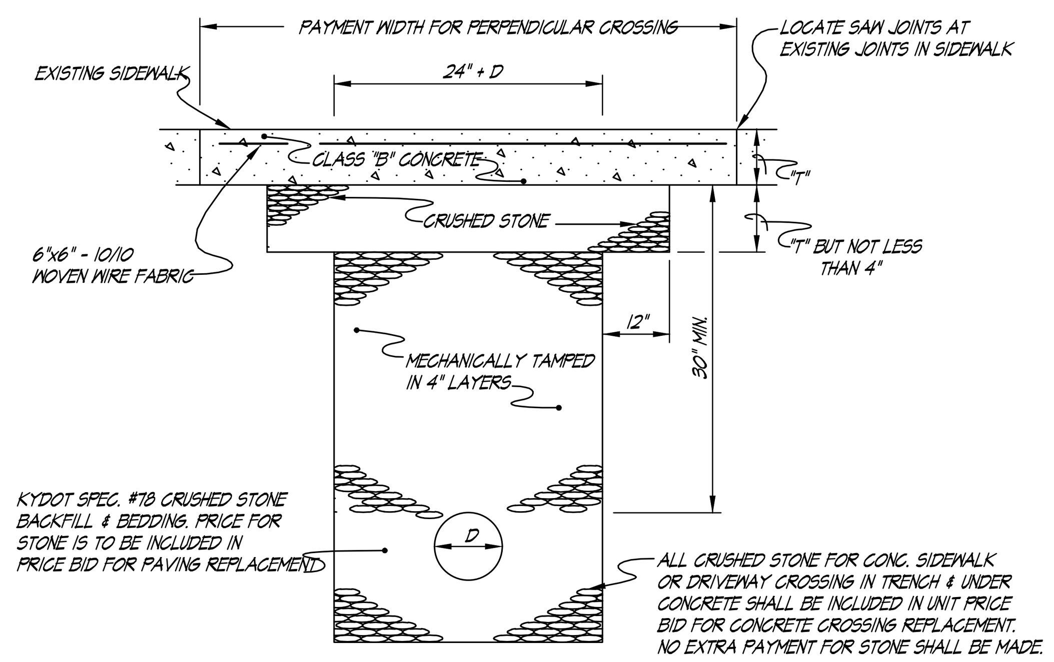

CONCRETE SIDEWALK OR DRIVEWAY CROSSING REPLACEMENT

N.T.S. (MD3-01)

CLASS	P.S.I
A	4000
B	3000
C	2500
D	2000
E	NO 28 DAY STD

28 DAYS CONCRETE STRENGTH

(MD2-05)

NOTE: 1) THIS AREA PAID FOR AS SIDEWALK REMOVAL & REPLACEMENT WHETHER REMOVED OR TUNNELED, IF A SEPERATE BID ITEM IS ESTABLISHED FOR THIS WORK IT WILL BE PAID FOR ON BASIS OF SQ. YDS. REQ'D. FOR A 4" THICK LAYER TO FIT DIMENSIONS SHOWN ON THIS PAGE. ADJUSTED TO REFLECT ACTUAL DEPTH REQ'D.

2) IF NO BID ITEM IS ESTABLISHED, ALL CROSSINGS MUST CONFORM W/THESE DETAILS & COST SHALL BE INCLUDE IN THE PRICE BID FOR LAYING WATER LINE.

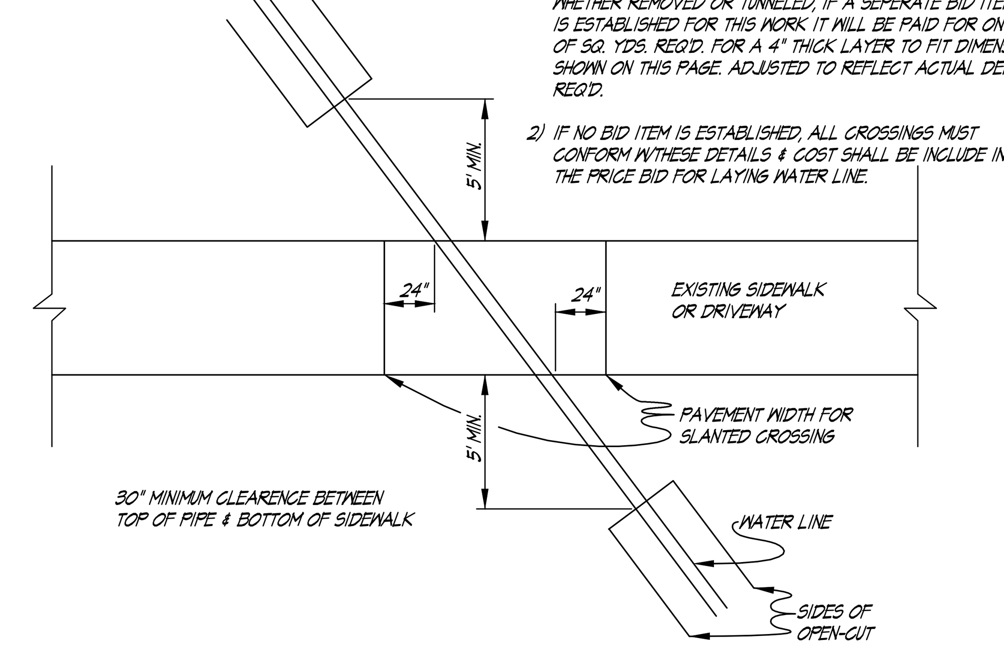

TUNNELING ALTERNATE SIDEWALK CROSSING

N.T.S. (MD3-07)

SOFT-SANDY CLAY SOIL (BEARING STRENGTH = 2,000#/FT.²)										
PIPE SIZE	BEARING AREA 90⁰ BEND	"B"	"A"	BEARING AREA 45⁰ BEND	"B"	"A"	BEARING AREA TEE, GATE VALVE & DEADEND	"B"	"A"
1 1/2"	0.33 FT.²	12"	4"	0.18 FT.²	8"	4"	0.24 FT.²	9"	4"
2"	0.52 FT.²	12"	7"	0.28 FT.²	12"	4"	0.37 FT.²	12"	5"
2 1/2"	0.75 FT.²	12"	9"	0.41 FT.²	12"	5"	0.53 FT.²	12"	7"
3"	1.12 FT.²	18"	9"	0.61 FT.²	12"	8"	0.79 FT.²	18"	7"
4"	1.84 FT.²	24"	12"	1.00 FT.²	18"	8"	1.30 FT.²	24"	8"
6"	3.96 FT.²	36"	16"	2.14 FT.²	26"	12"	2.80 FT.²	30"	14"
8"	6.70 FT.²	54"	18"	3.63 FT.²	30"	18"	4.74 FT.²	36"	19"
10"	10.00 FT.²	60"	24"	5.41 FT.²	44"	18"	7.07 FT.²	43"	24"
12"	13.69 FT.²	60"	33"	7.41 FT.²	36"	30"	9.68 FT.²	47"	30"
14"	16.35 FT.²	66"	36"	9.35 FT.²	40"	34"	12.20 FT.²	60"	30"
16"	19.55 FT.²	72"	40"	11.35 FT.²	60"	28"	14.77 FT.²	60"	36"

I THRUST BLOCKS (160 P.S.I. DESIGNED)

(MD2-08)

SOLID-SAND & GRAVEL CEMENTED W/CLAY (BEARING STRENGTH = 4,000 #/FT.²)									
PIPE SIZE	BEARING AREA 90⁰ BEND	"B"	"A"	BEARING AREA 45⁰ BEND	"B"	"A"	BEARING AREA TEE, GATE VALVE & DEADEND	"B"	"A"
1 1/2"	0.17 FT.²	6"	4"	0.90 FT.²	4"	4"	0.12 FT.²	5"	4"
2"	0.26 FT.²	10"	4"	0.14 FT.²	6"	4"	0.18 FT.²	7"	4"
2 1/2"	0.23 FT.²	12"	5"	0.20 FT.²	8"	4"	0.26 FT.²	10"	4"
3"	0.56 FT.²	12"	7"	0.30 FT.²	8"	6"	0.40 FT.²	10"	6"
4"	0.92 FT.²	18"	8"	0.50 FT.²	9"	8"	0.65 FT.²	12"	8"
6"	1.98 FT.²	24"	12"	1.07 FT.²	16"	10"	1.40 FT.²	18"	12"
8"	3.35 FT.²	42"	12"	1.82 FT.²	22"	12"	2.37 FT.²	29"	12"
10"	5.00 FT.²	40"	18"	2.71 FT.²	22"	18"	3.54 FT.²	29"	18"
12"	6.85 FT.²	42"	24"	3.71 FT.²	30"	18"	4.84 FT.²	30"	24"
14"	8.80 FT.²	43"	30"	4.67 FT.²	36"	19"	6.16 FT.²	36"	26"
16"	11.20 FT.²	62"	27"	5.66 FT.²	44"	19"	7.50 FT.²	36"	30"

II THRUST BLOCKS (160 P.S.I. DESIGNED)

(MD2-09)

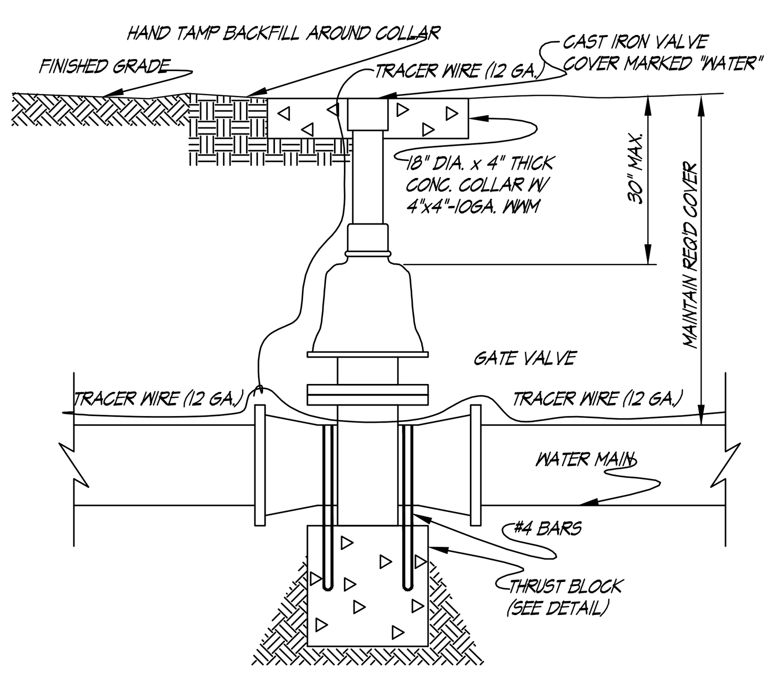

GATE VALVE SETTING

N.T.S. (SCW-02)

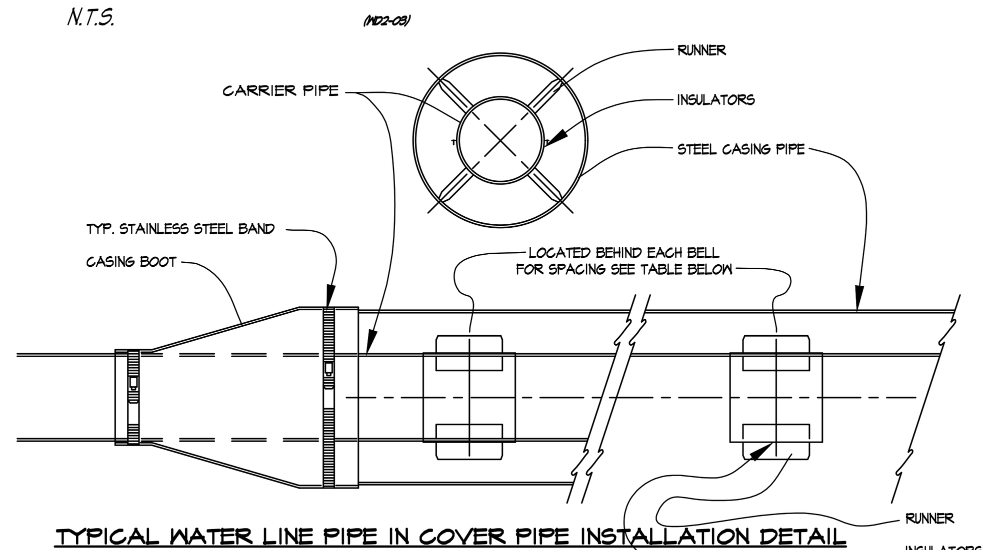

TYPICAL WATER LINE PIPE IN COVER PIPE INSTALLATION DETAIL

N.T.S. PS2-07

1. PIPELINE SPACERS PIPES INSTALLED INSIDE COVER PIPES SHALL BE CENTERED THROUGHOUT THE LENGTH OF COVER PIPE. CENTERING SHALL BE ACCOMPLISHED BY THE INSTALLATION OF POLYETHYLENE PIPELINE SPACERS ATTACHED TO THE PIPE IN SUCH MANNER AS TO PREVENT THE DISLODGMENT OF THE SPACERS AS THE CARRIER PIPE IS PULLED OR PUSHED THROUGH THE COVER PIPE. SPACERS SHALL BE OF SUCH DIMENSIONS TO PROVIDE (1) FULL SUPPORTIVE LOAD CAPACITY OF THE PIPE AND CONTENTS; (2) OF SUCH THICKNESS TO ALLOW INSTALLATION AND/OR REMOVAL OF THE PIPE; AND (3) TO ALLOW NO GREATER THAN 1/2 INCH MOVEMENT OF THE CARRIER PIPE WITHIN THE COVER PIPE AFTER CARRIER PIPE IS INSTALLED. SPACERS SHALL BE LOCATED IMMEDIATELY BEHIND EACH BELL AND AT A MAXIMUM SPACING DISTANCE AS FOLLOWS:

PIPELINE DIAMETER (IN.)	MAXIMUM SPACING (FT.)
4" - 8" 10" - 24"	7' 10'

2. END SEALS UPON COMPLETION OF INSTALLATION OF THE CARRIER PIPE, THE ANNULAR SPACE AT THE ENDS OF THE COVER PIPE SHALL BE SEALED TO PREVENT THE ENTRANCE OF GROUNDWATER, SILT, ETC., INTO THE COVER PIPE. THE SEAL SHALL BE A MANUFACTURED PRODUCT SPECIALLY MADE FOR THIS PURPOSE. THE SEAL SHALL BE CONSTRUCTED OF SYNTHETIC RUBBER WITH STAINLESS STEEL BANDING STRAPS.

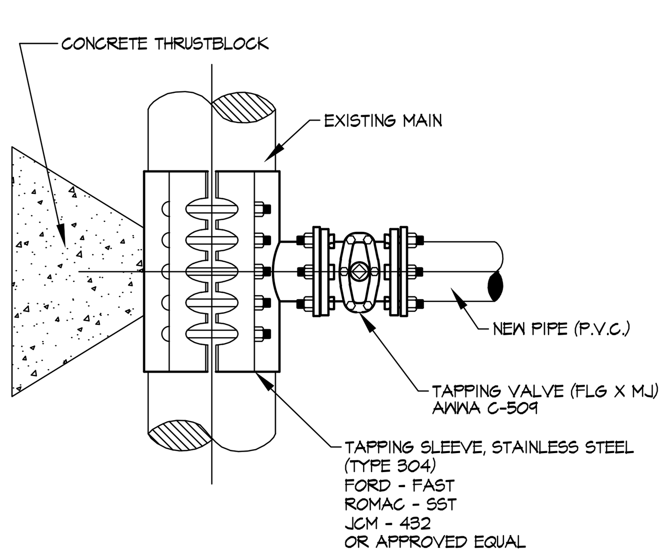

WET TAPPING SLEEVE ASSEMBLY

N.T.S. (WET TAP CONNECTION.DWG)

CARRIER PIPE NOMINAL SIZE	MINIMUM I.D. OF CASING PIPE FOR: PLASTIC B&S or COIL	C.I. or D.I. B&S	C.I. or D.I M.J.	A.B.S. CEM. or A.B.S.
3/4"	1-1/4"	———	———	———
1"&1-1/4"	2"	———	———	———
1-1/2"	3"	———	———	———
2"	3-1/2"	———	———	———
2-1/2"	4"	———	———	———
3"	5"	8"	10"	———
4"	8"	8"	10"	———
5"	8"	———	———	———
6"	10"	12"	12"	12"
8"	12"	13-1/2"	15-1/2"	13-1/2"
10"	15-1/2"	15-1/2"	17-1/2"	15-1/2"
12"	17-1/2"	17-1/2"	19-1/2"	19-1/2"
14"	———	19-1/2"	21-1/2"	21-1/2"
16"	———	21-1/2"	23-1/2"	23-1/2"
18"	———	25-1/2"	27-1/2"	27-1/2"

WATERLINE CASING PIPE SCHEDULE

(MD3-02)

CARRIER PIPE NOMINAL SIZE	MINIMUM I.D. OF CASING PIPE FOR: PLASTIC B&S or COIL	C.I. or D.I. B&S	C.I. or D.I M.J.	A.B.S. CEM. or A.B.S.	MAX. SKID SUPPORT SPACING L.F. APART
3/4"	1-1/4"	———	———	———	———
1"&1-1/4"	2"	———	———	———	———
1-1/2"	3"	———	———	———	———
2"	3-1/2"	———	———	———	———
2-1/2"	4"	———	———	———	———
3"	5"	8"	10"	———	———
4"	8"	8"	10"	———	4.7"
5"	8"	———	———	———	5.5"
6"	10"	12"	12"	12"	6.3"
8"	12"	13-1/2"	15-1/2"	13-1/2"	7.4"
10"	15-1/2"	15-1/2"	17-1/2"	15-1/2"	8.5"
12"	17-1/2"	17-1/2"	19-1/2"	19-1/2"	9.6"
14"	———	19-1/2"	21-1/2"	21-1/2"	10.0"
16"	———	21-1/2"	23-1/2"	23-1/2"	11.0"
18"	———	25-1/2"	27-1/2"	27-1/2"	12.0"

WATERLINE CASING PIPE SCHEDULE

(MD2-06)

NOTE: UNDER ROAD CROSSINGS STEEL CASING PIPE SHALL BE REQUIRED, PIPES 4" & LESS SHALL BE NEW SCHEDULE 40, PIPES LARGER THAN 4" SHALL HAVE MINIMUM WALL THICKNESS OF 0.250". ALL BORED & JACKED ENCASEMENT PIPE SHALL BE INSTALLED IN BORE HOLES NO LARGER THAN THE OUTSIDE DIAMETER OF THE ENCASEMENT PIPE.

NOTE: ALL JOINTS TO BE SOLIDLY WELDED, END OF CASING TO BE SEALED W/CONCRETE AFTER LINE HAS BEEN INSTALLED & TESTED.

NOTE: OPEN TRENCH NO CLOSER THAN THE DITCHLINE FROM THE EDGE OF THE PAVEMENT OR AS DIRECTED BY STATE, COUNTY, OR MUNICIPAL SPECIFICATIONS.

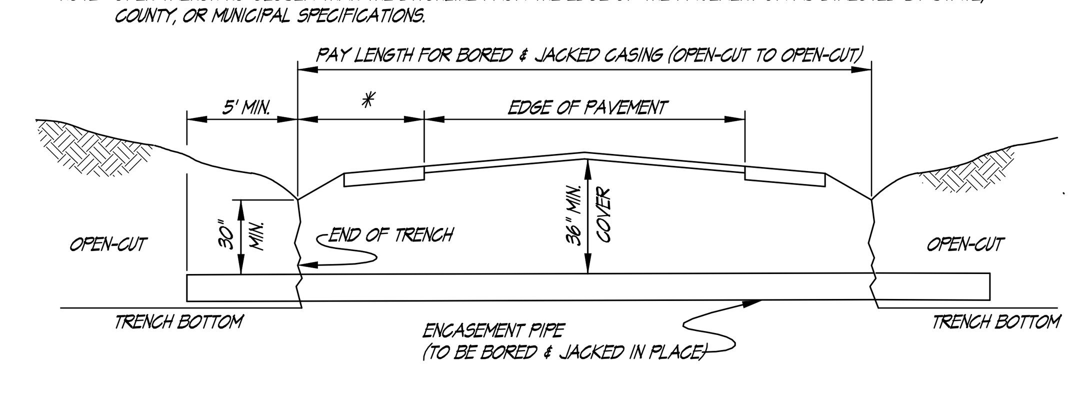

SECTION VIEW OF ROAD CROSSING

N.T.S. (MD3-06)

STANDARD WATER DETAILS

WATER, SEWER AND ACCESS ROAD EXTENSIONS
GRACE CLINIC PROJECT
SOUTHEAST KENTUCKY INDUSTRIAL DEVELOPMENT AUTHORITY
KNOX COUNTY, KENTUCKY

DATE	REVISION	BY

PROJECT NO.	2063-65
DESIGNED BY	D.S.T.
DRAWN BY	G.M.S.
CHECKED BY	D.S.T.
REVIEWED BY	D.S.T.
DATE	AUGUST 2016
SCALE	AS NOTED

© COPYRIGHT
NOTICE: This document discloses subject matter considered confidential by Mayes, Sudderth & Etheredge, Inc. and on which Mayes, Sudderth & Etheredge, Inc. has property rights. Neither receipt nor possession thereof confers or transfers any rights to reproduce the document or any part thereof, or to disclose any information contained therein to others, or to use it for any purpose without the written permission of Mayes, Sudderth & Etheredge, Inc.

MSE OF KENTUCKY, INC.
Engineers Architects Planners
624 Wellington Way
Lexington, KY 40503
www.mselex.com
Phone: (859)223-5694
Fax: (859)223-2607

DRAWING NO.

WD2

SHEET OF